Computer Networks

Fall 2024 Semester

Course Code: CS – 3001

Offered to BCS22 – 5K, BDS21 – 7C

Course Instructor: Aftab Alam

Lecture 9

September 19, 2024 (Thursday)

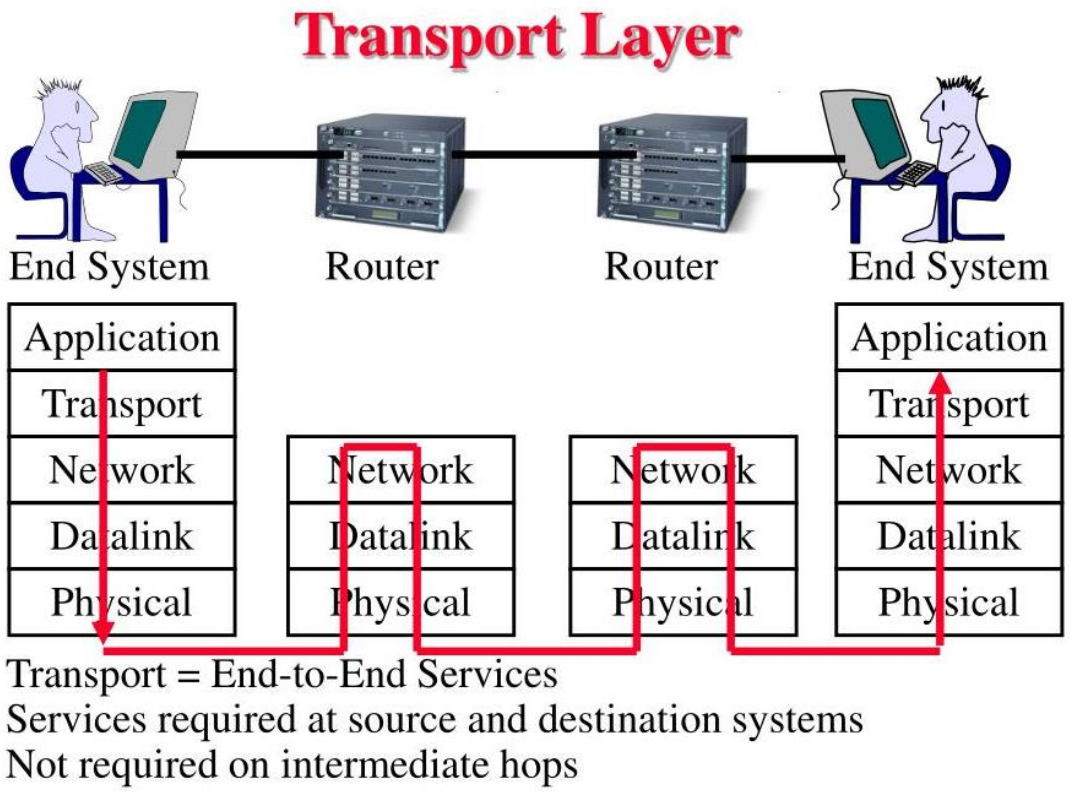

Transport layer: overview

Our goal:

- understand principles behind transport layer services:
  - multiplexing, demultiplexing
  - reliable data transfer
  - flow control
  - congestion control
- learn about Internet transport layer protocols:
  - UDP: connectionless transport
  - TCP: connection-oriented reliable transport
  - TCP congestion control

Transport layer: roadmap

- Transport-layer services
- Multiplexing and demultiplexing
- Connectionless transport: UDP
- Principles of reliable data transfer
- Connection-oriented transport: TCP
- Principles of congestion control
- TCP congestion control
- Evolution of transport-layer functionality

Transport services and protocols

- provide *logical communication* between application processes running on different hosts
- transport protocols actions in end systems:
  - sender: breaks application messages into *segments*, passes to network layer
  - receiver: reassembles segments into messages, passes to application layer
- two transport protocols available to Internet applications
  - TCP, UDP

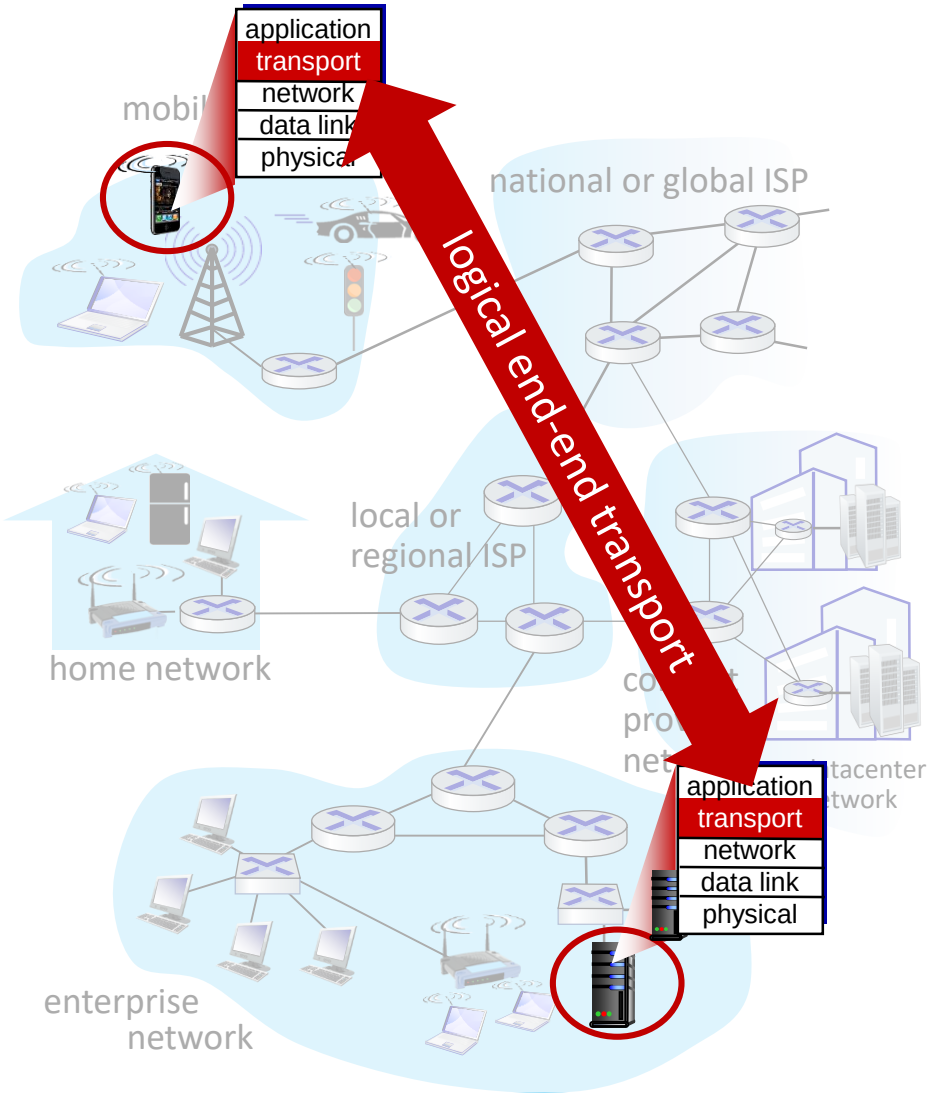

Transport vs. network layer services and protocols

household analogy:

12 kids in Ann's house sending letters to 12 kids in Bill's house:

- hosts = houses
- processes = kids
- app messages = letters in envelopes

Transport vs. network layer services and protocols

- network layer: logical communication between *hosts*
- transport layer: logical communication between *processes*
  - relies on, enhances, network layer services

household analogy:

12 kids in Ann's house sending letters to 12 kids in Bill's house:

- hosts = houses
- processes = kids
- app messages = letters in envelopes

Transport Layer Actions

Sender:

- is passed an application-layer message
- determines segment header fields values
- creates segment
- passes segment to IP

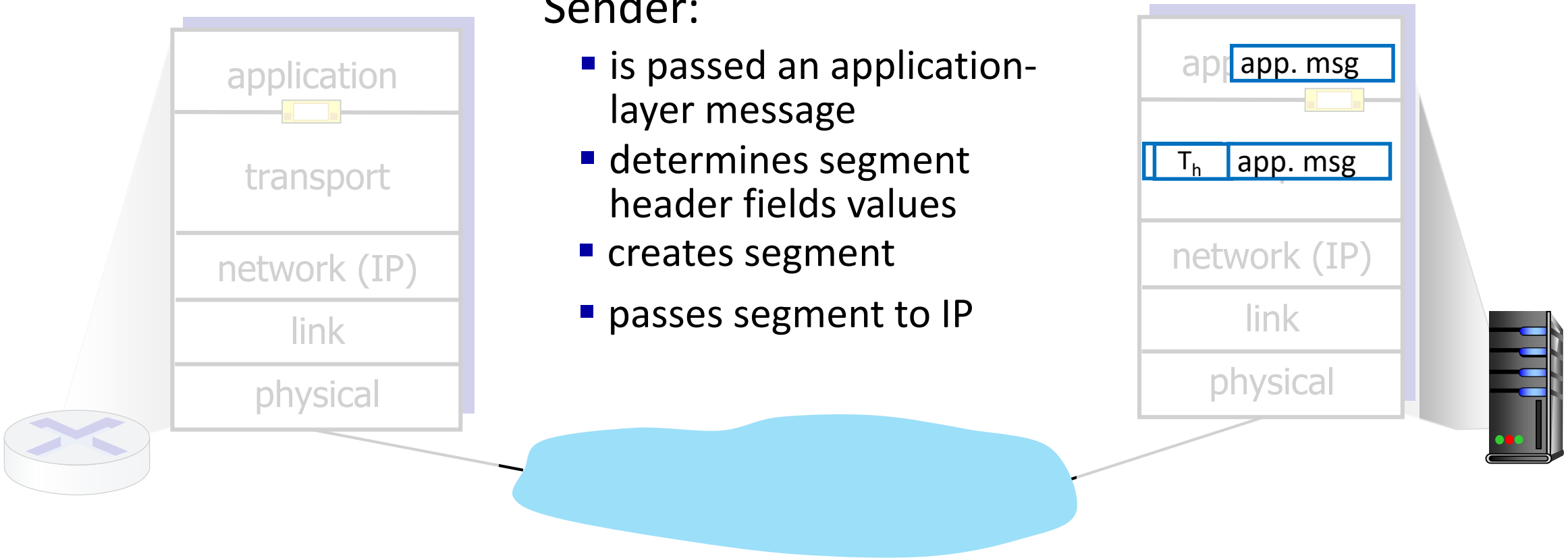

Transport Layer Actions

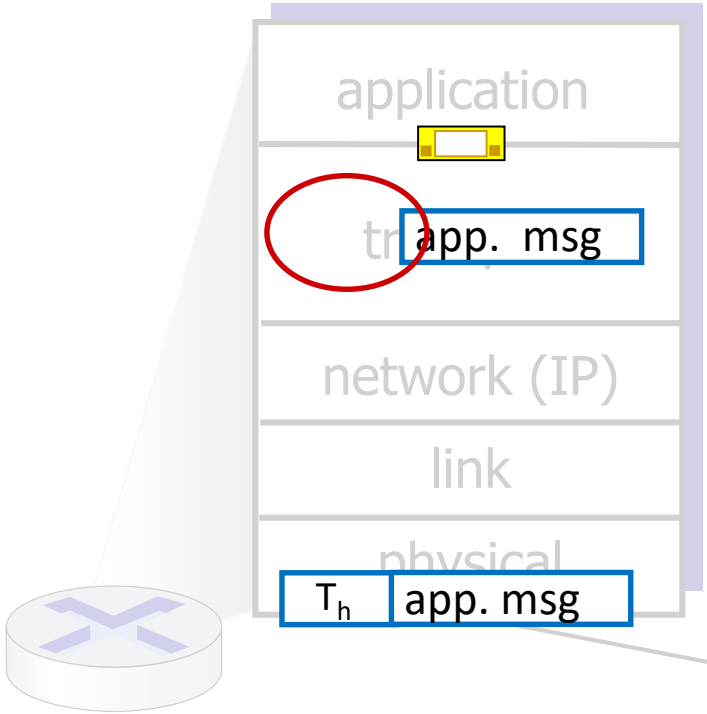

Receiver:

- receives segment from IP
- checks header values
- extracts application-layer message
- demultiplexes message up to application via socket

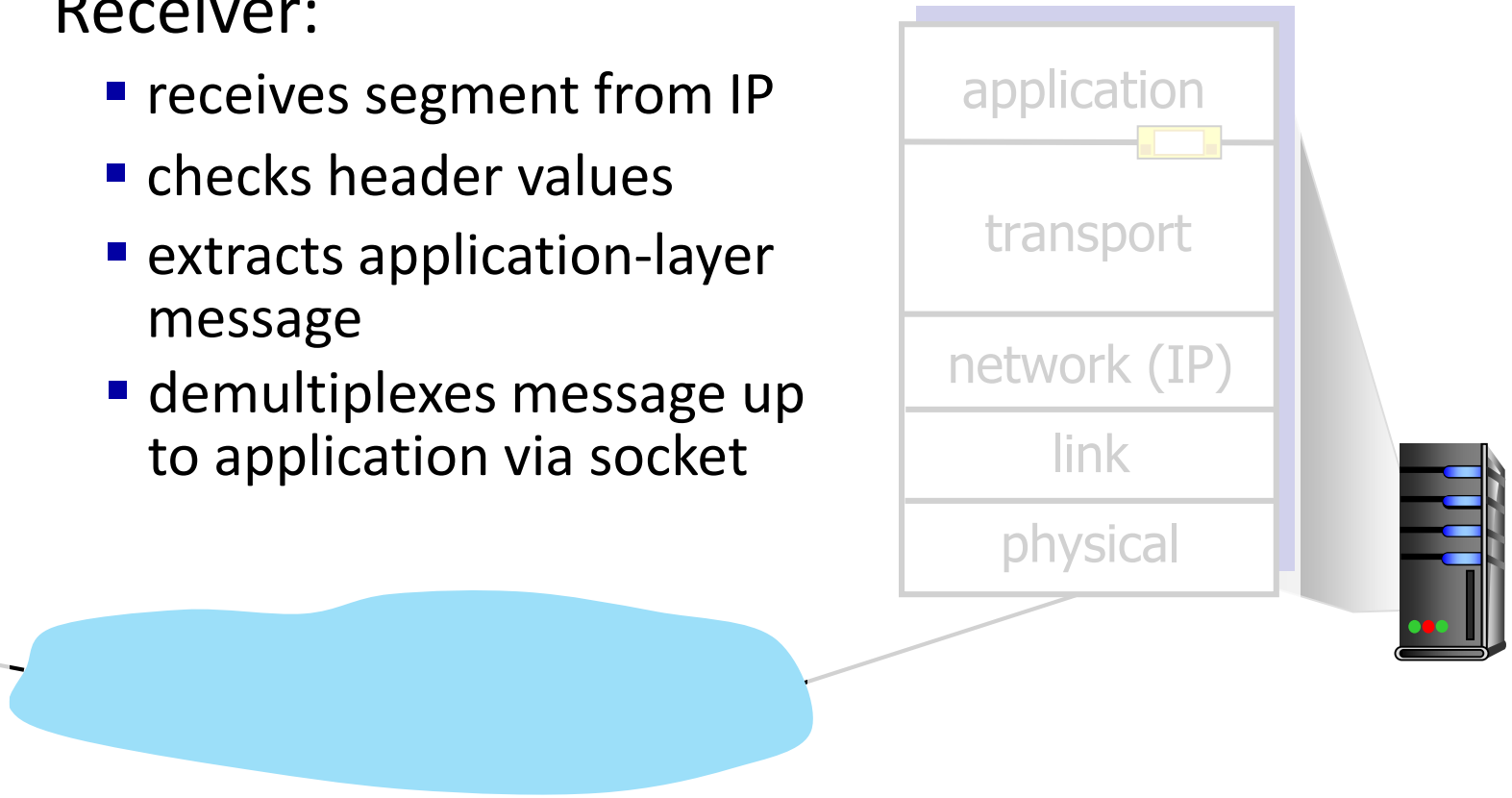

Two principal Internet transport protocols

- **TCP:** Transmission Control Protocol
  - reliable, in-order delivery
  - congestion control
  - flow control
  - connection setup
- **UDP:** User Datagram Protocol
  - unreliable, unordered delivery
  - no-frills extension of “best-effort” IP
- services not available:
  - delay guarantees
  - bandwidth guarantees

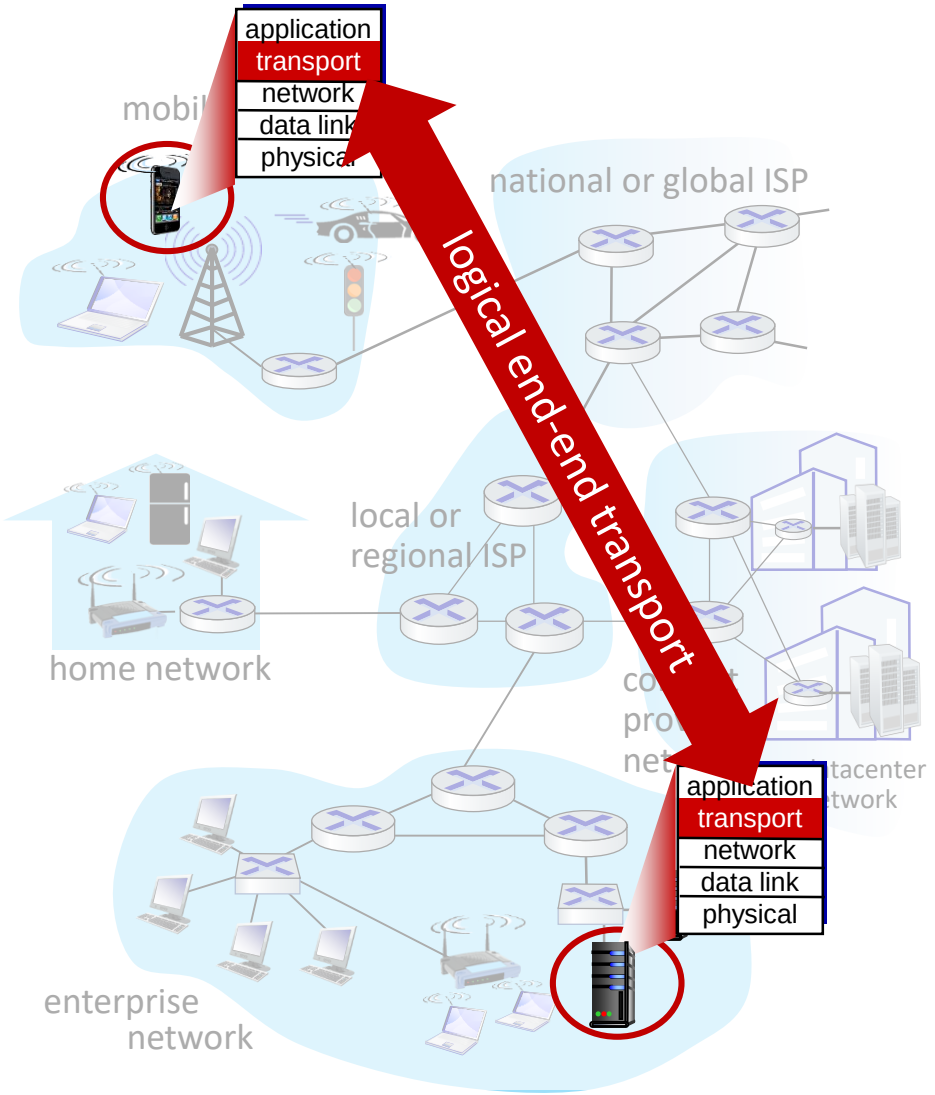

Chapter 3: roadmap

- Transport-layer services
- Multiplexing and demultiplexing
- Connectionless transport: UDP
- Principles of reliable data transfer
- Connection-oriented transport: TCP
- Principles of congestion control
- TCP congestion control
- Evolution of transport-layer functionality

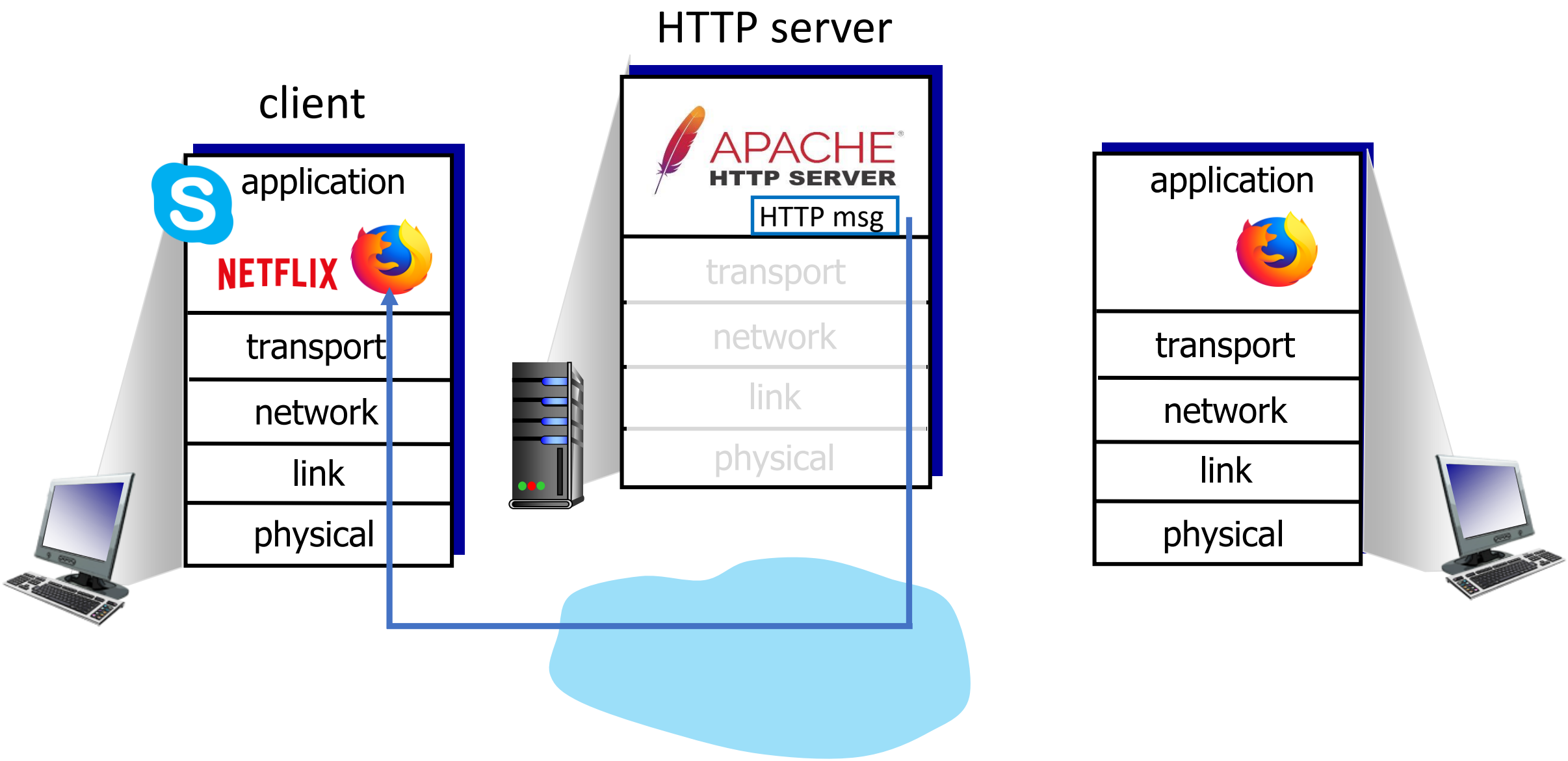
HTTP server
client
application
NETFLIX
transport
network
link
physical
APACHE
HTTP SERVER
HTTP msg
transport
network
link
physical
application
transport
network
link
physical

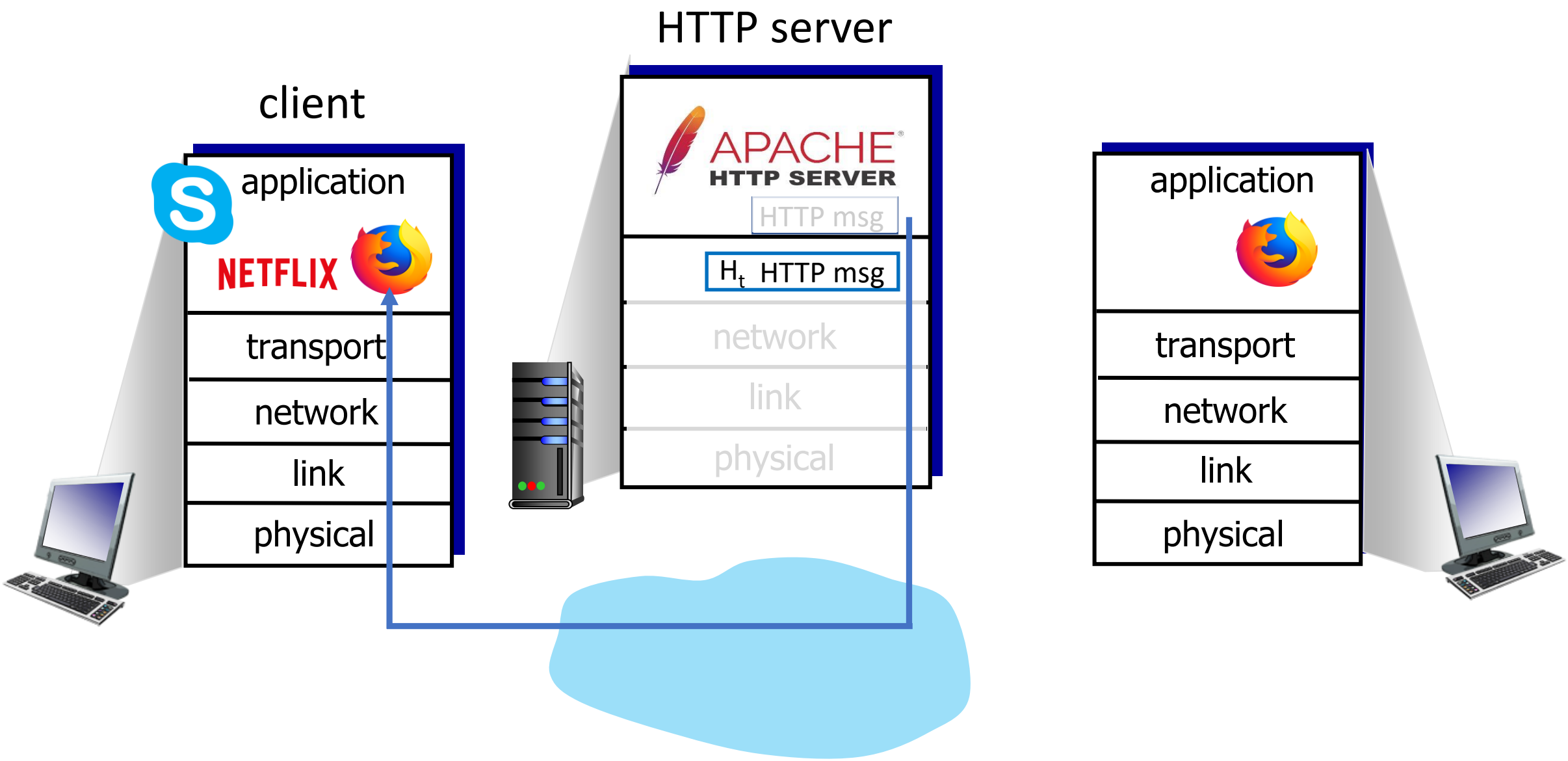
HTTP server
client
application
NETFLIX
transport
network
link
physical
APACHE
HTTP SERVER
HTTP msg
H_t HTTP msg
network
link
physical
application
transport
network
link
physical

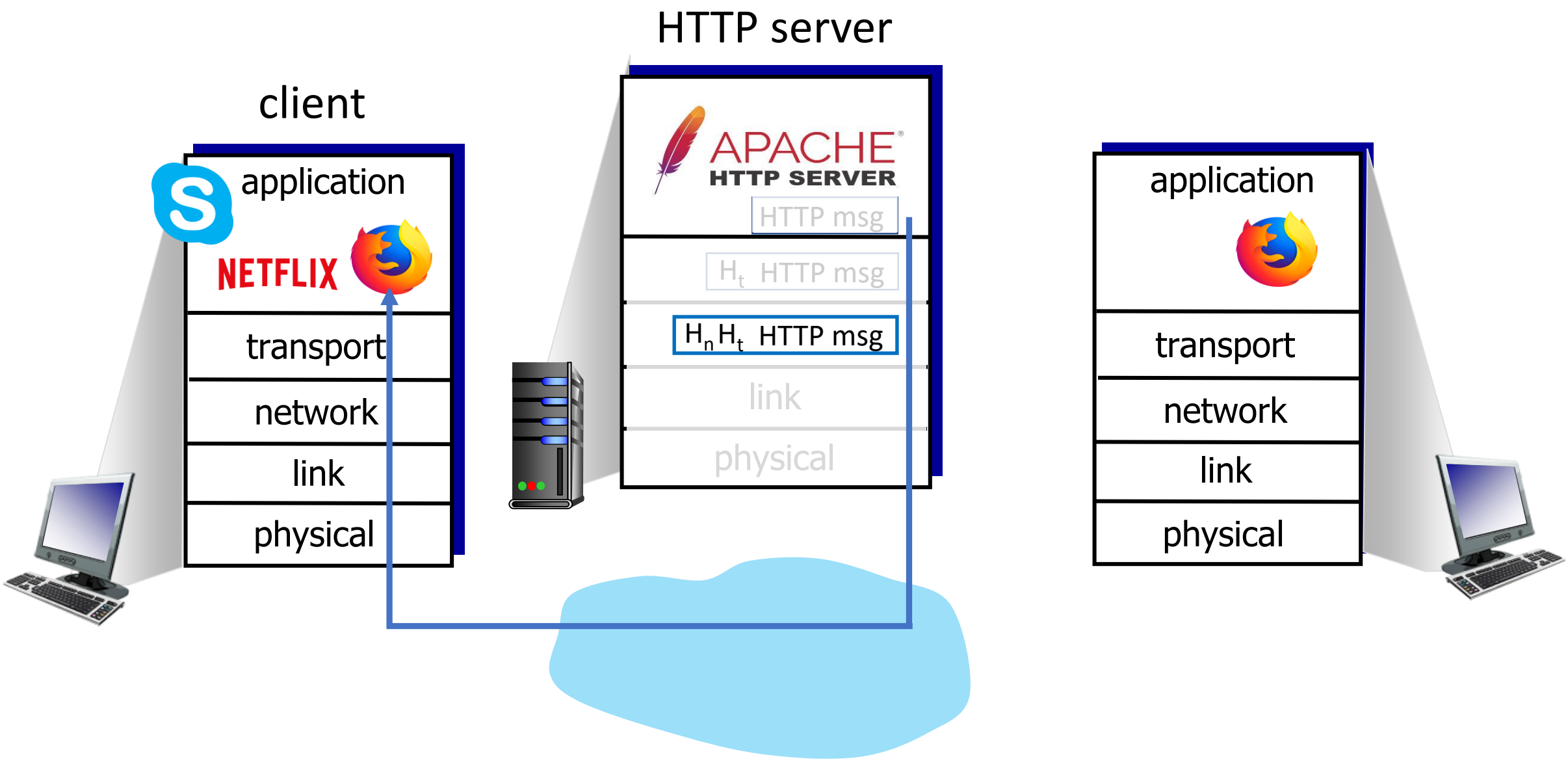
HTTP server
client
application
NETFLIX
transport
network
link
physical
APACHE
HTTP SERVER
HTTP msg
H_t HTTP msg
$H_n H_t$ HTTP msg
link
physical
application
transport
network
link
physical

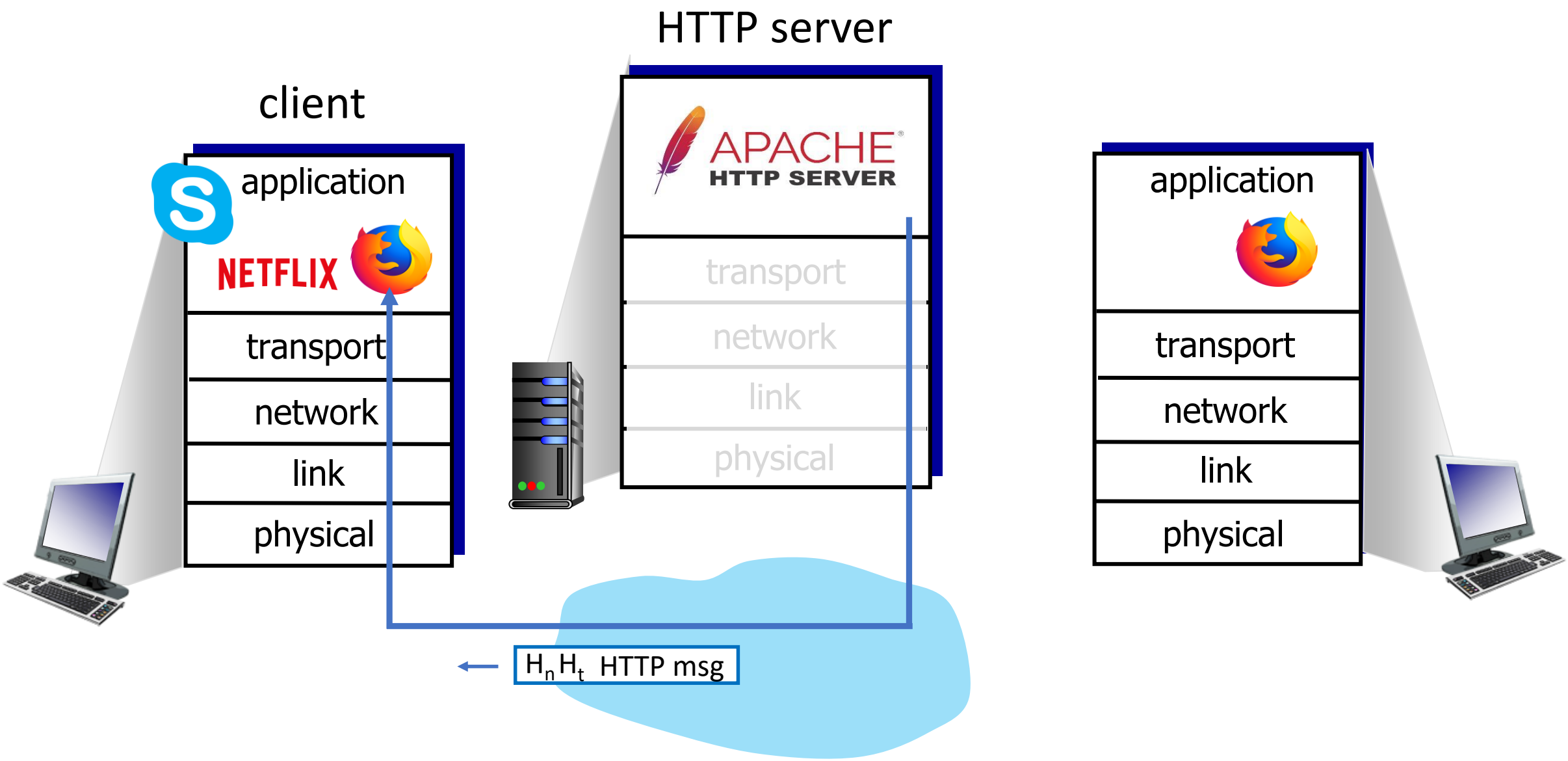
HTTP server
client
application
NETFLIX
transport
network
link
physical
APACHE
HTTP SERVER
transport
network
link
physical
application
transport
network
link
physical
$H_n H_t$ HTTP msg

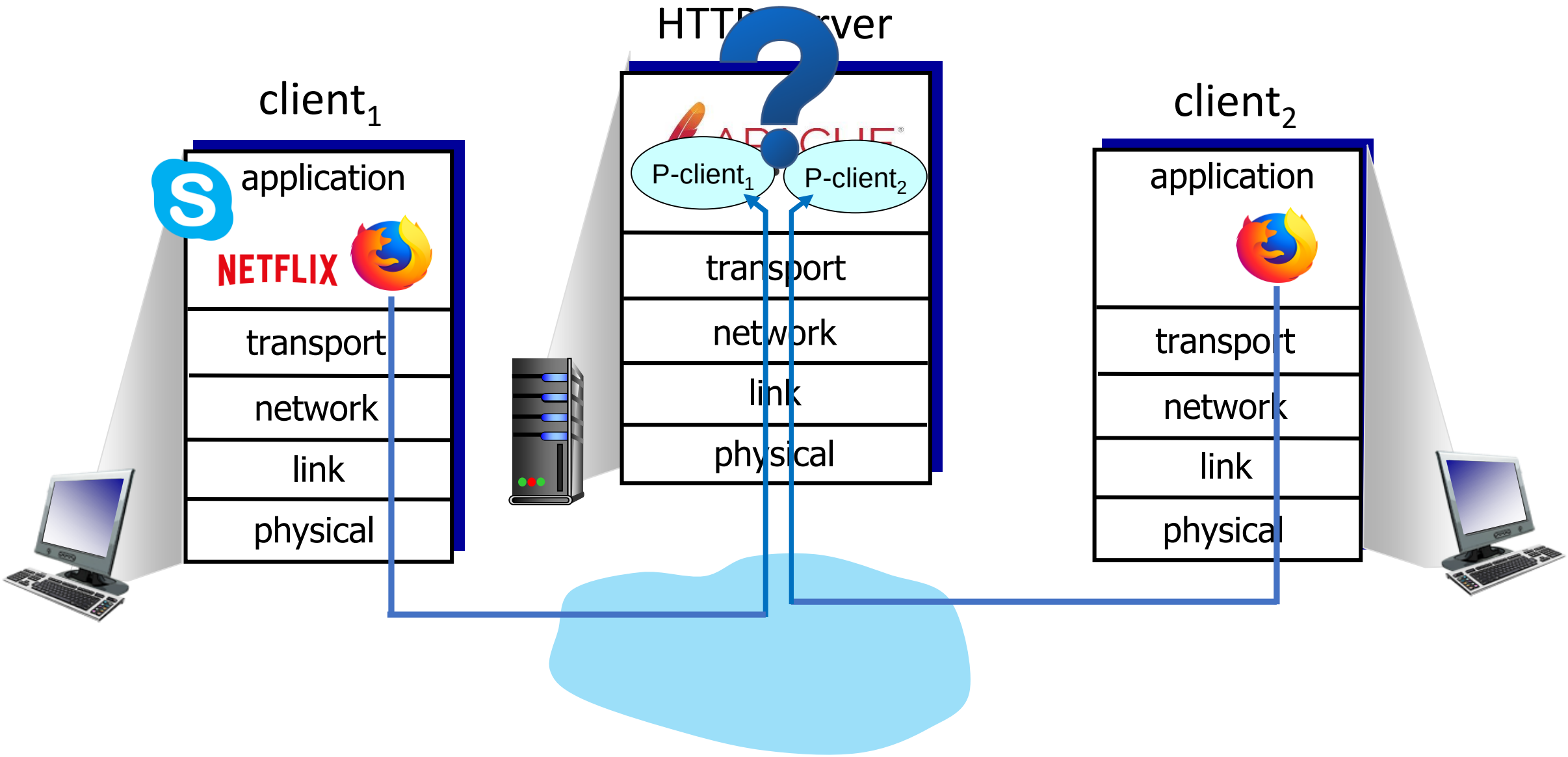
client1
application
NETFLIX
transport
network
link
physical
HTTP server
P-client1
P-client2
transport
network
link
physical
client2
application
transport
network
link
physical

Multiplexing/demultiplexing

multiplexing at sender:

handle data from multiple sockets, add transport header (later used for demultiplexing)

demultiplexing at receiver:

use header info to deliver received segments to correct socket

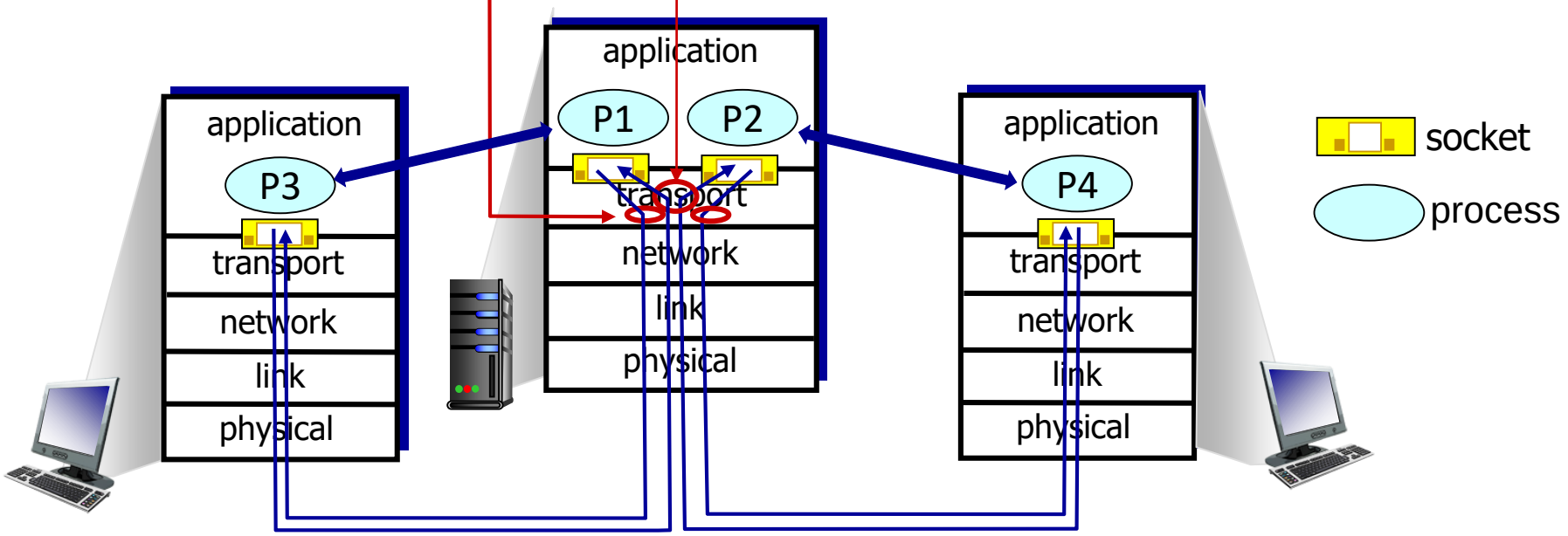

How demultiplexing works

- host receives IP datagrams
  - each datagram has source IP address, destination IP address
  - each datagram carries one transport-layer segment
  - each segment has source, destination port number
- host uses *IP addresses & port numbers* to direct segment to appropriate socket

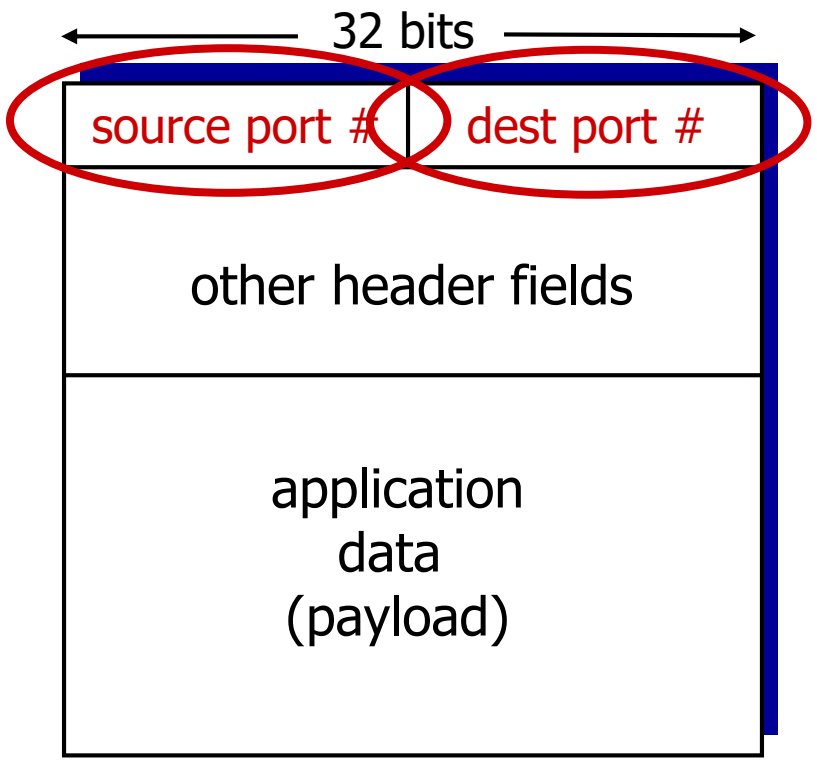

TCP/UDP segment format

Connectionless demultiplexing

Recall:

- when creating socket, must specify *host-local* port #:

```
DatagramSocket mySocket1
 = new DatagramSocket(12534);
```

- when creating datagram to send into UDP socket, must specify
  - destination IP address
  - destination port #

when receiving host receives *UDP* segment:

- checks destination port # in segment
- directs UDP segment to socket with that port #

IP/UDP datagrams with *same dest. port #,* but different source IP addresses and/or source port numbers will be directed to *same socket* at receiving host

Connectionless demultiplexing: an example

```
DatagramSocket
 serverSocket = new
 DatagramSocket
 (6428);
```

```
DatagramSocket mySocket2 =
 new DatagramSocket
 (9157);
```

```
DatagramSocket mySocket1 =
 new DatagramSocket (5775);
```

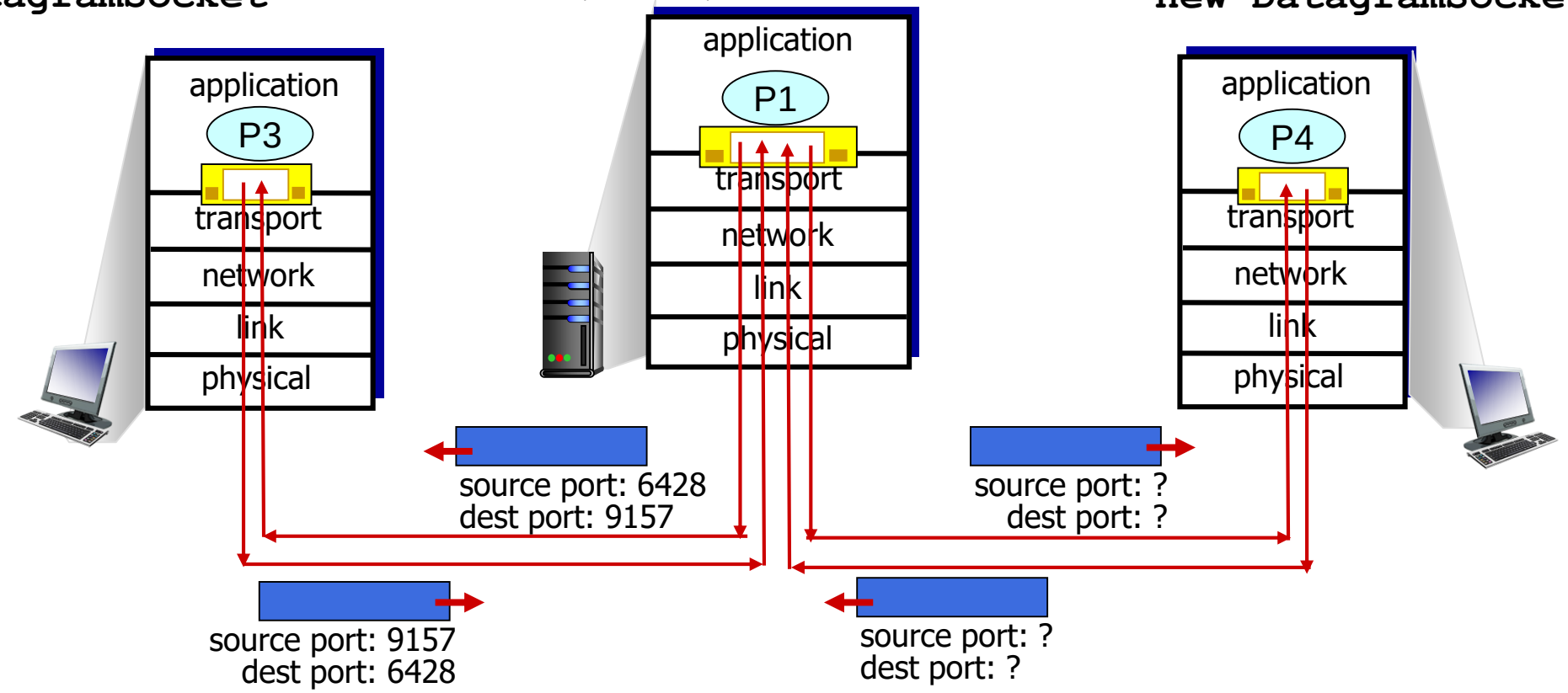

Connection-oriented demultiplexing

- TCP socket identified by 4-tuple:
  - source IP address
  - source port number
  - dest IP address
  - dest port number
- demux: receiver uses *all four values (4-tuple)* to direct segment to appropriate socket
- server may support many simultaneous TCP sockets:
  - each socket identified by its own 4-tuple
  - each socket associated with a different connecting client

Connection-oriented demultiplexing: example

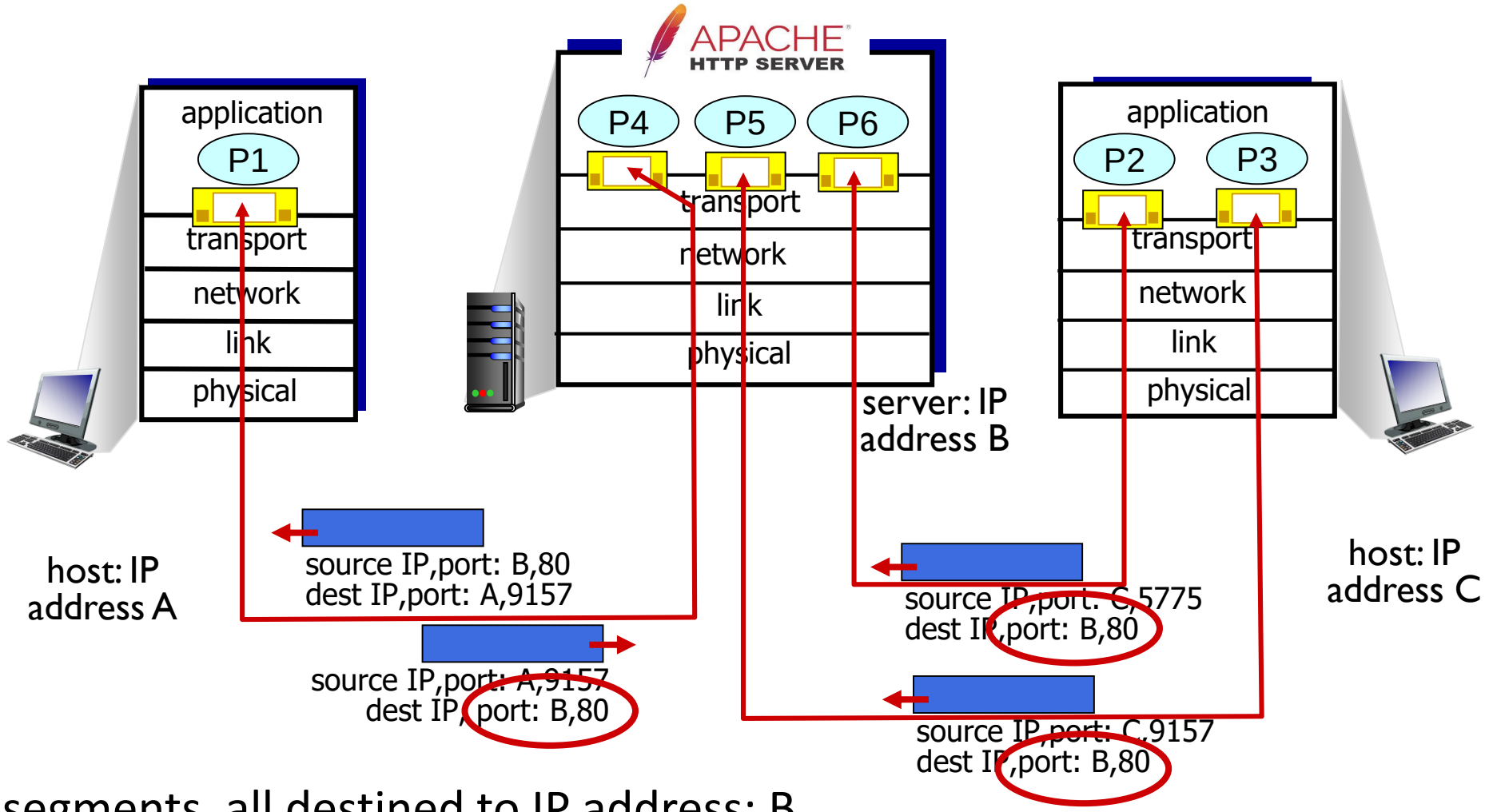

Three segments, all destined to IP address: B, dest port: 80 are demultiplexed to *different* sockets

Summary

- Multiplexing, demultiplexing: based on segment, datagram header field values
- **UDP:** demultiplexing using destination port number (only)
- **TCP:** demultiplexing using 4-tuple: source and destination IP addresses, and port numbers
- Multiplexing/demultiplexing happen at *all* layers